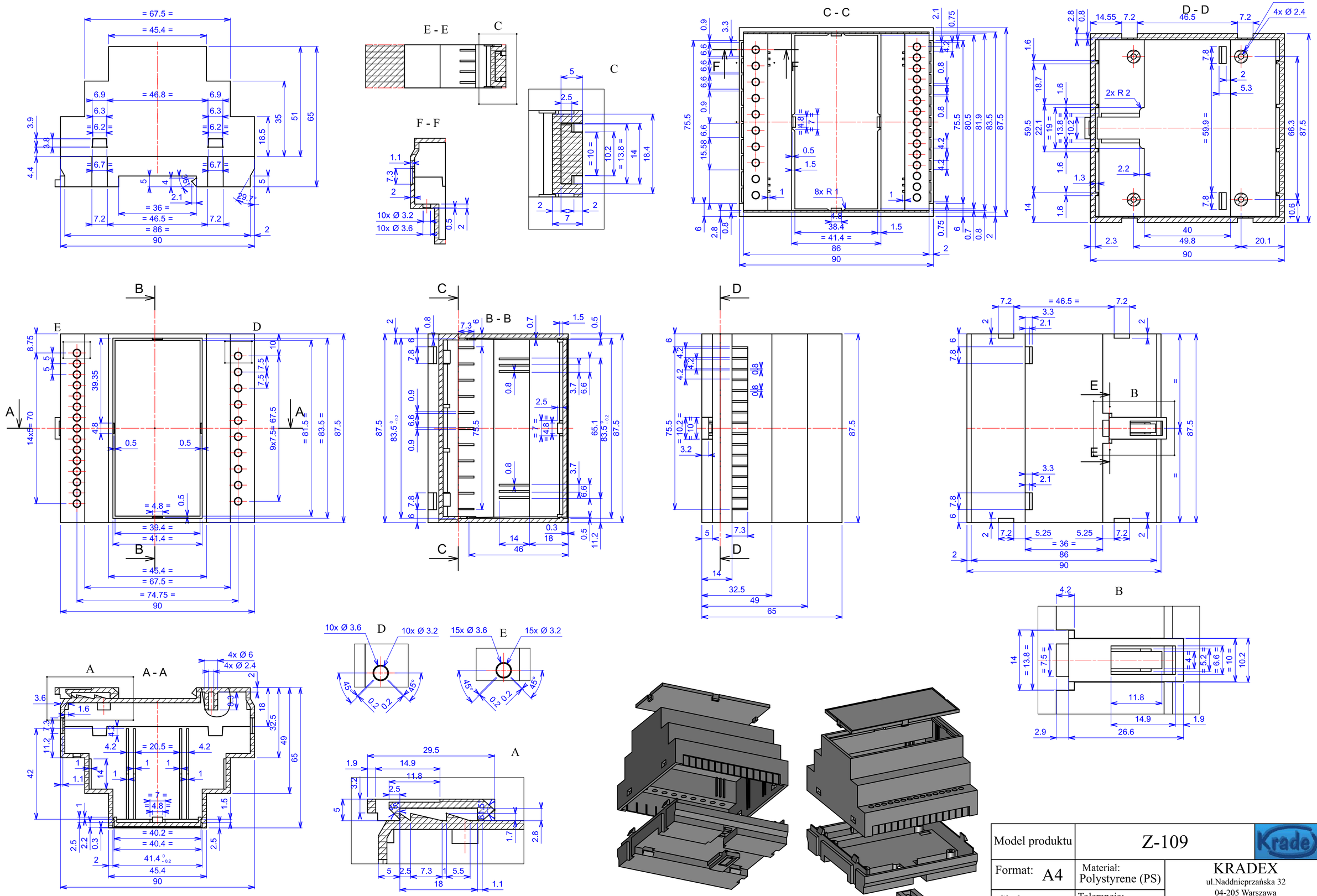

Model produktu	Z-109	KradeX
Format: A4	Materiał: Polystyrene (PS)	KRADEX ul.Naddnieprzańska 32 04-205 Warszawa Tel:+48 022 613-08-88, Fax: 812-10-68 www.kradex.com.pl
Skala: 1:1	Tolerancja: +/- 0.1	

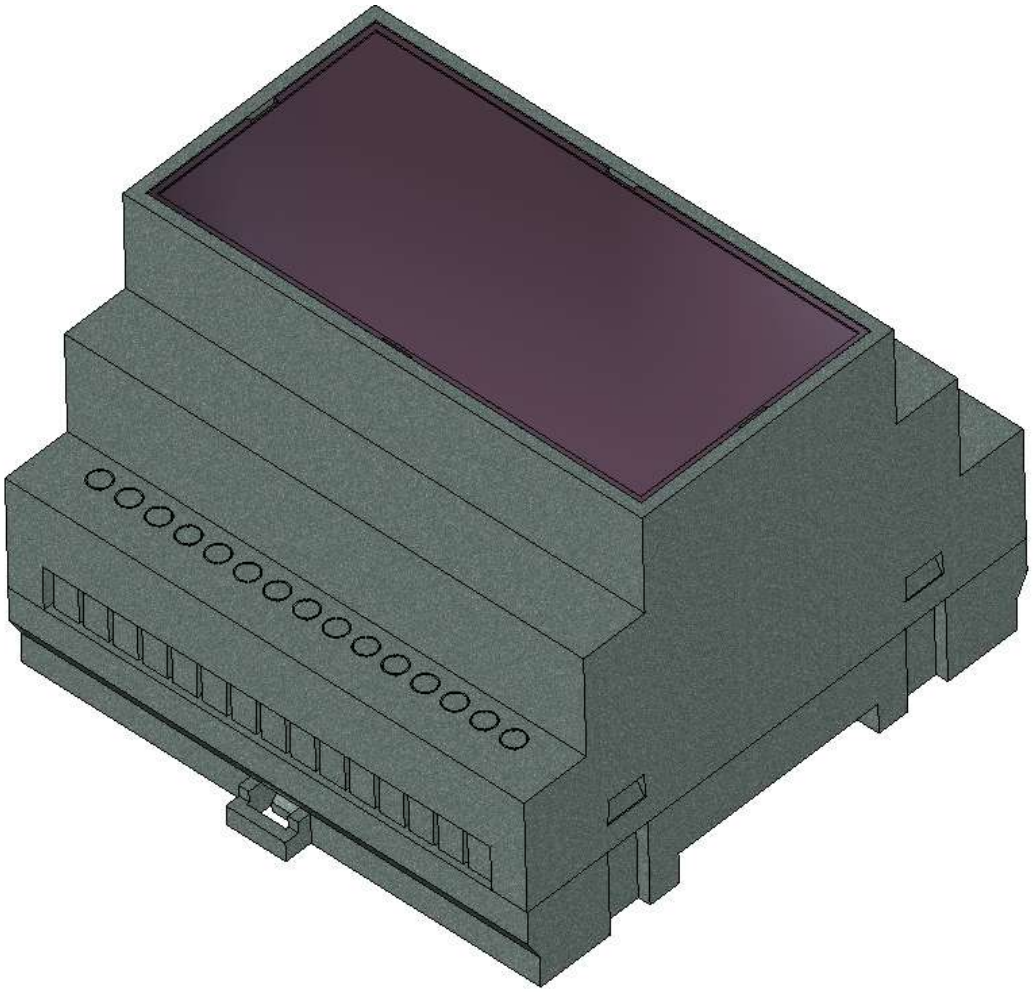

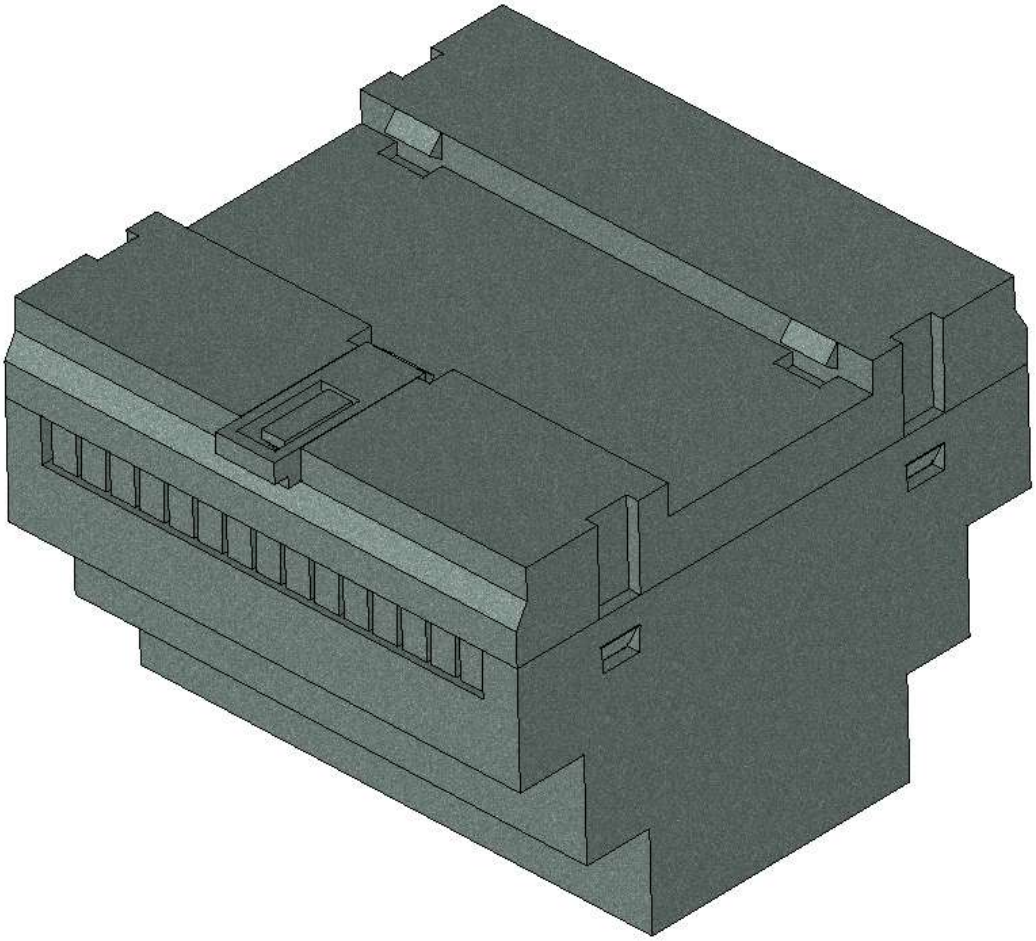

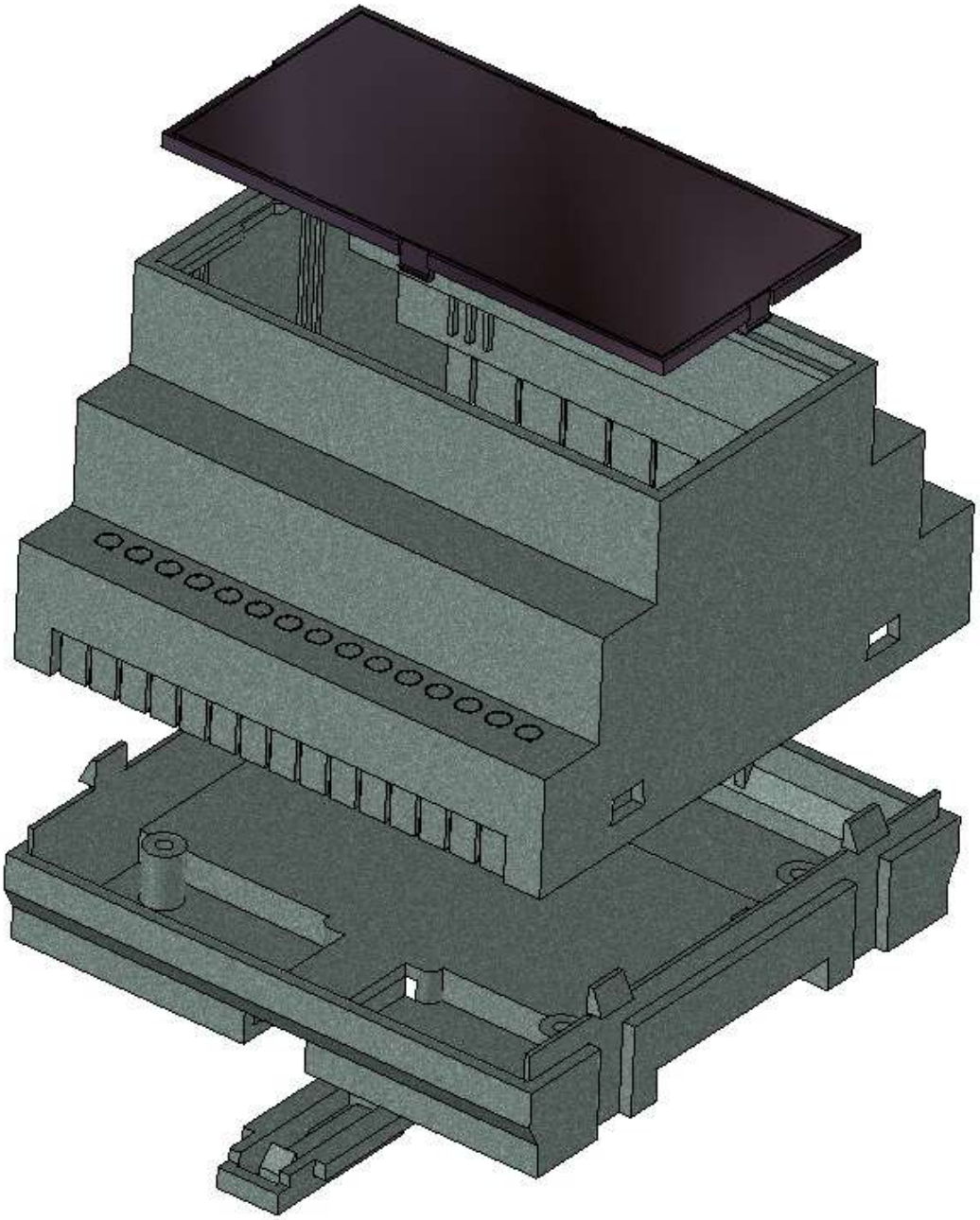

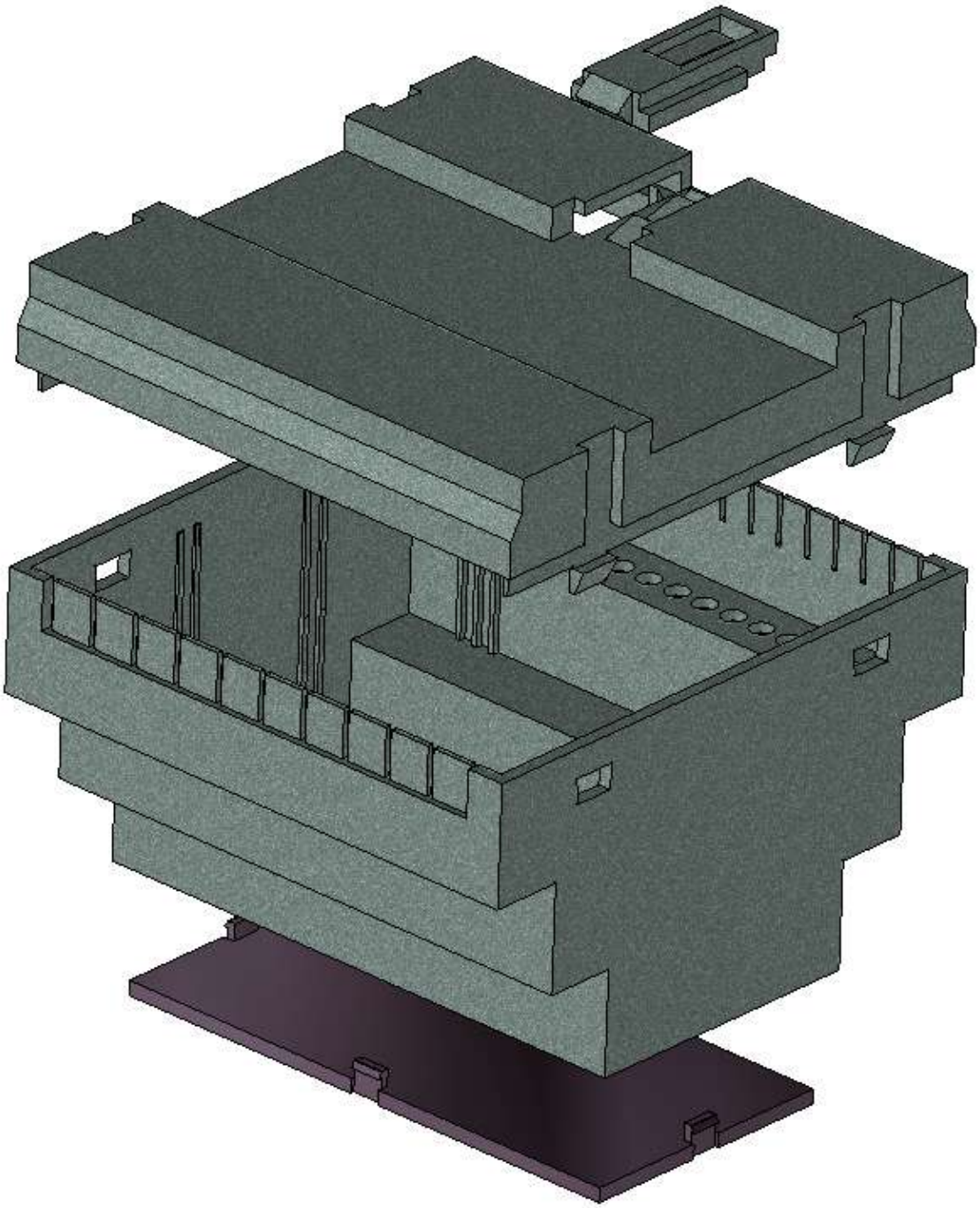

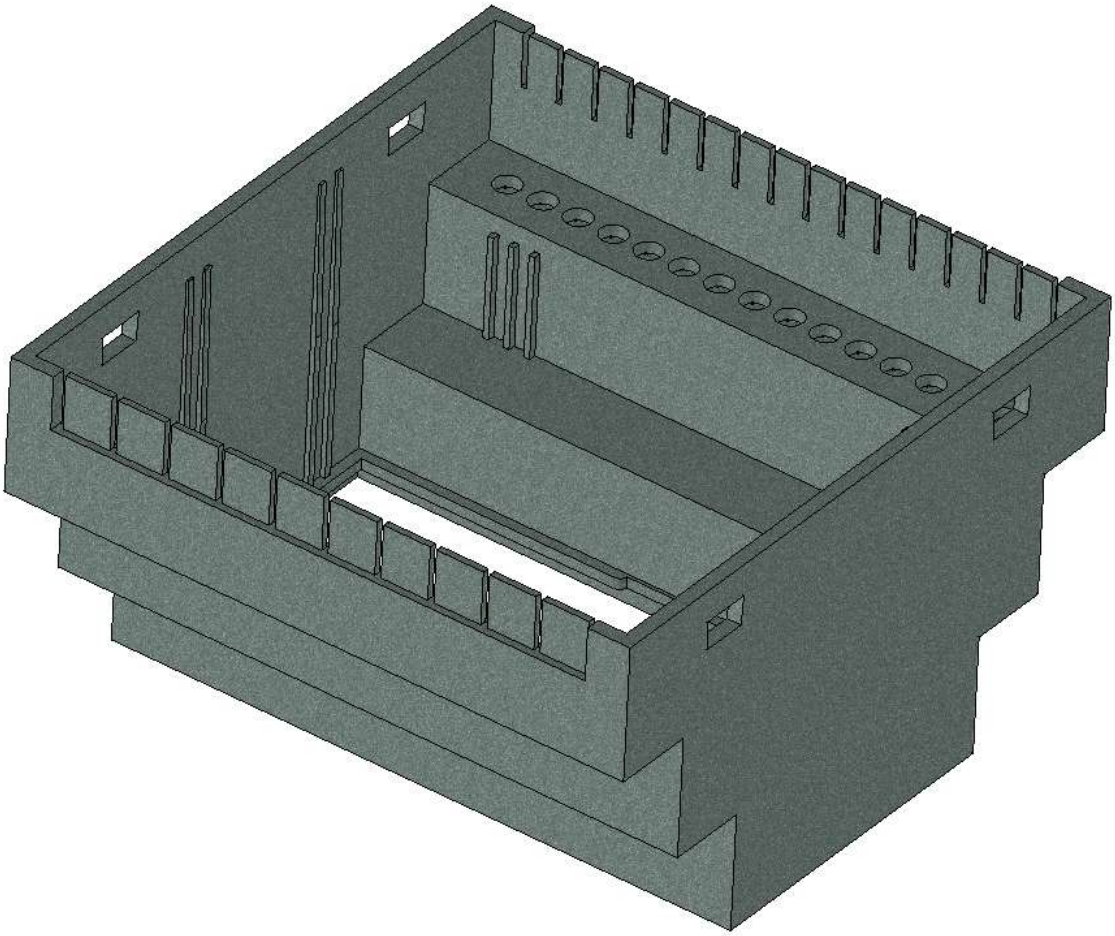

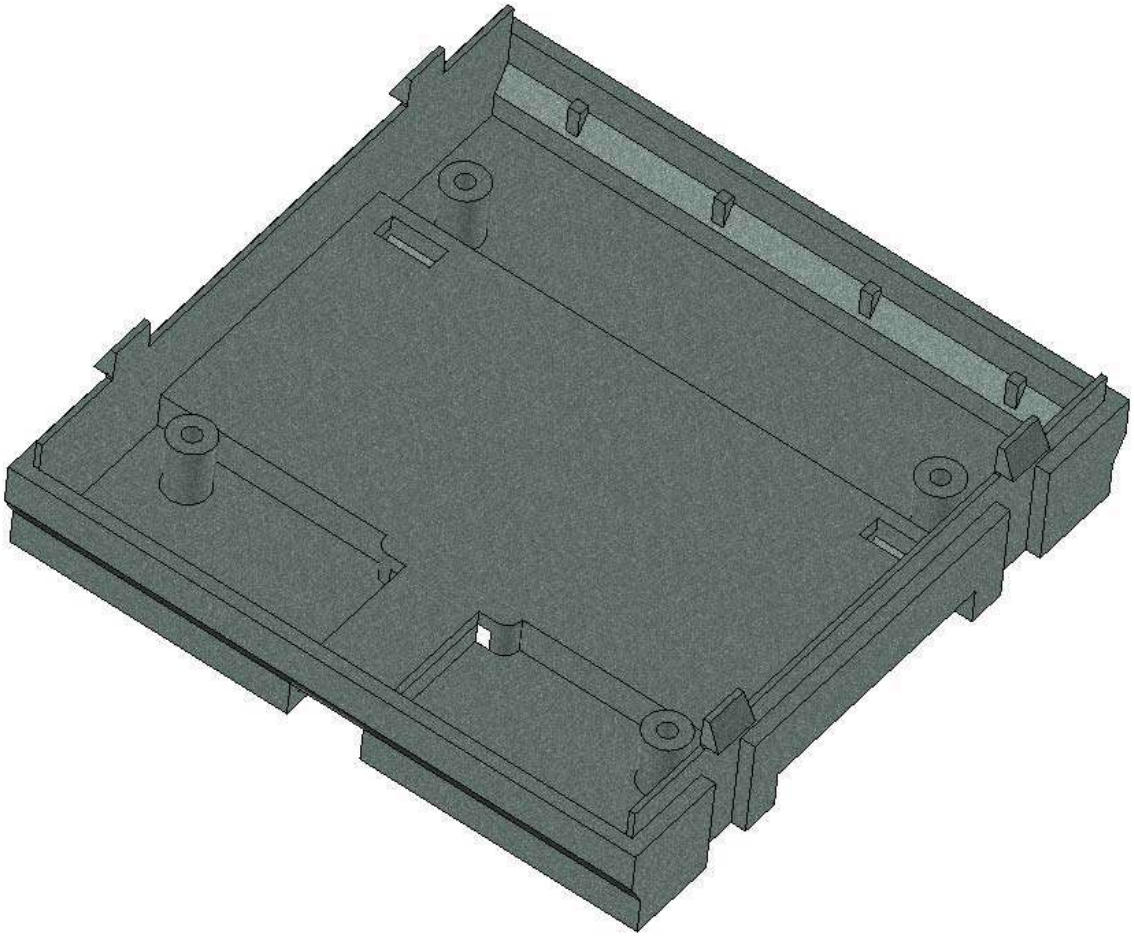

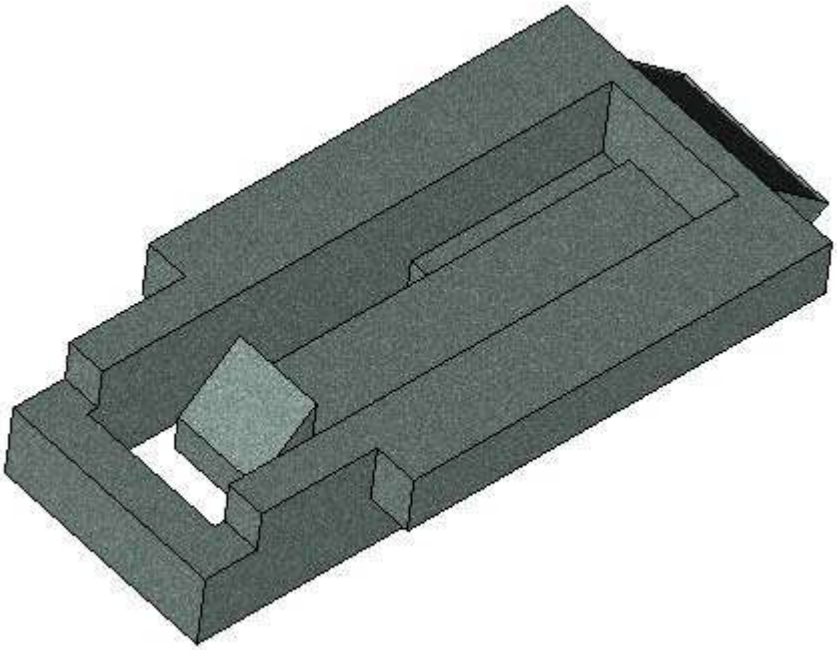

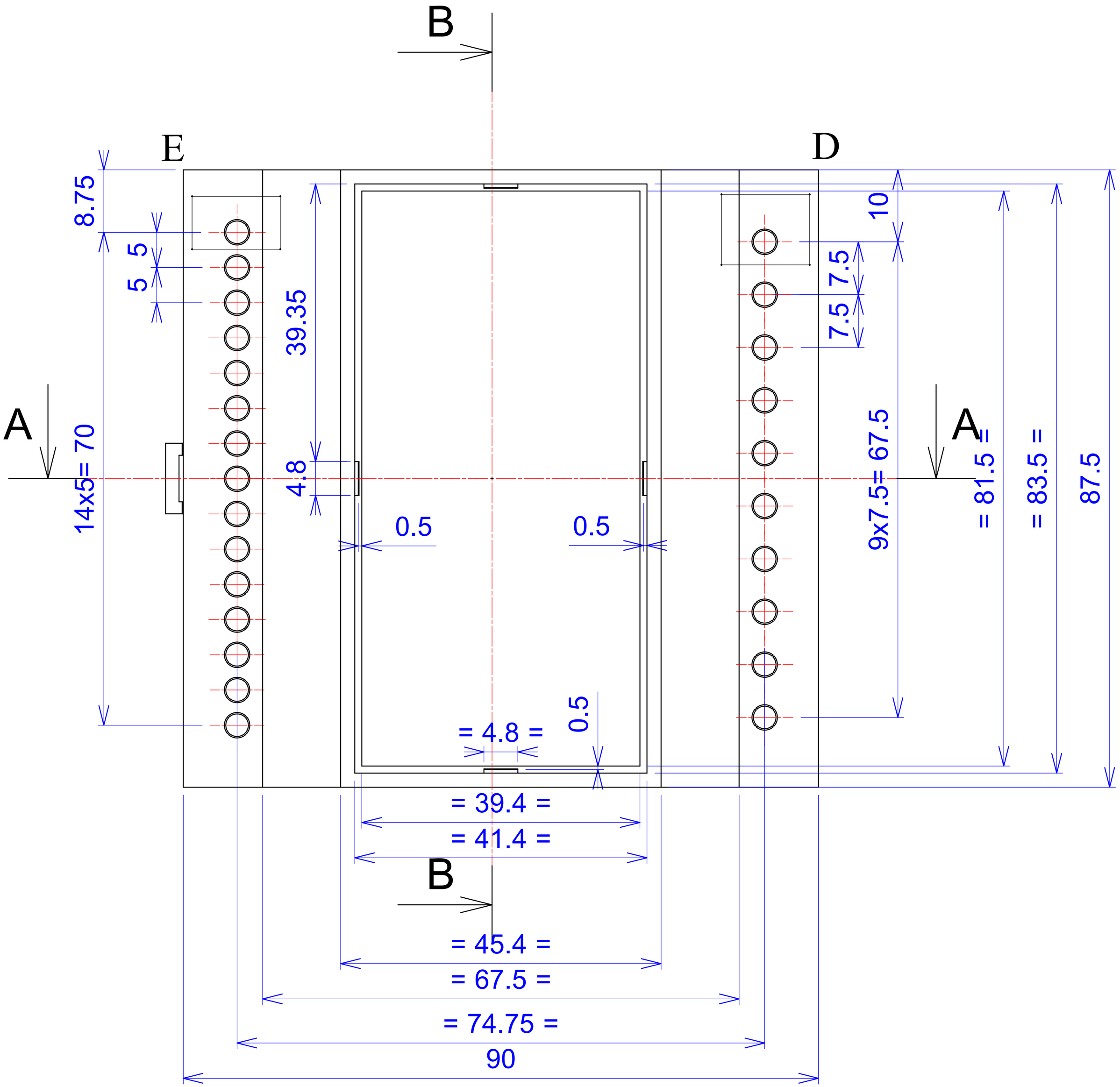
B
E
D
8.75
5
5
39.35
10
7.5
7.5
A
14x5= 70
4.8
0.5
0.5
9x7.5= 67.5
A
= 81.5 =
= 83.5 =
87.5
0.5
= 4.8 =
= 39.4 =
= 41.4 =
B
= 45.4 =
= 67.5 =
= 74.75 =
90

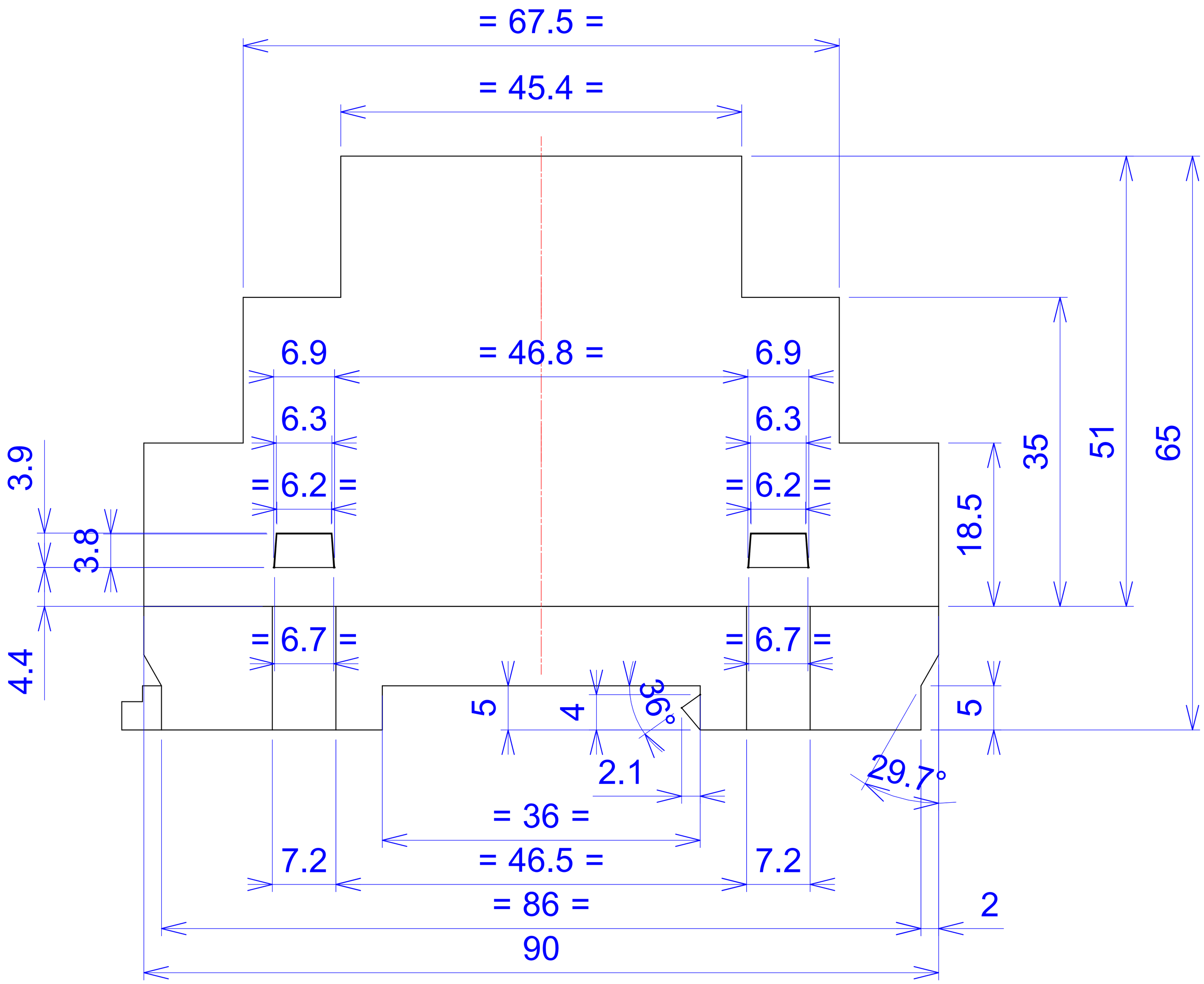
= 67.5 =
= 45.4 =
6.9
= 46.8 =
6.9
6.3
6.3
= 6.2 =
= 6.2 =
3.9
3.8
4.4
= 6.7 =
= 6.7 =
18.5
35
51
65
5
4
36°
2.1
5
29.7°
= 36 =
7.2
= 46.5 =
7.2
= 86 =
2
90

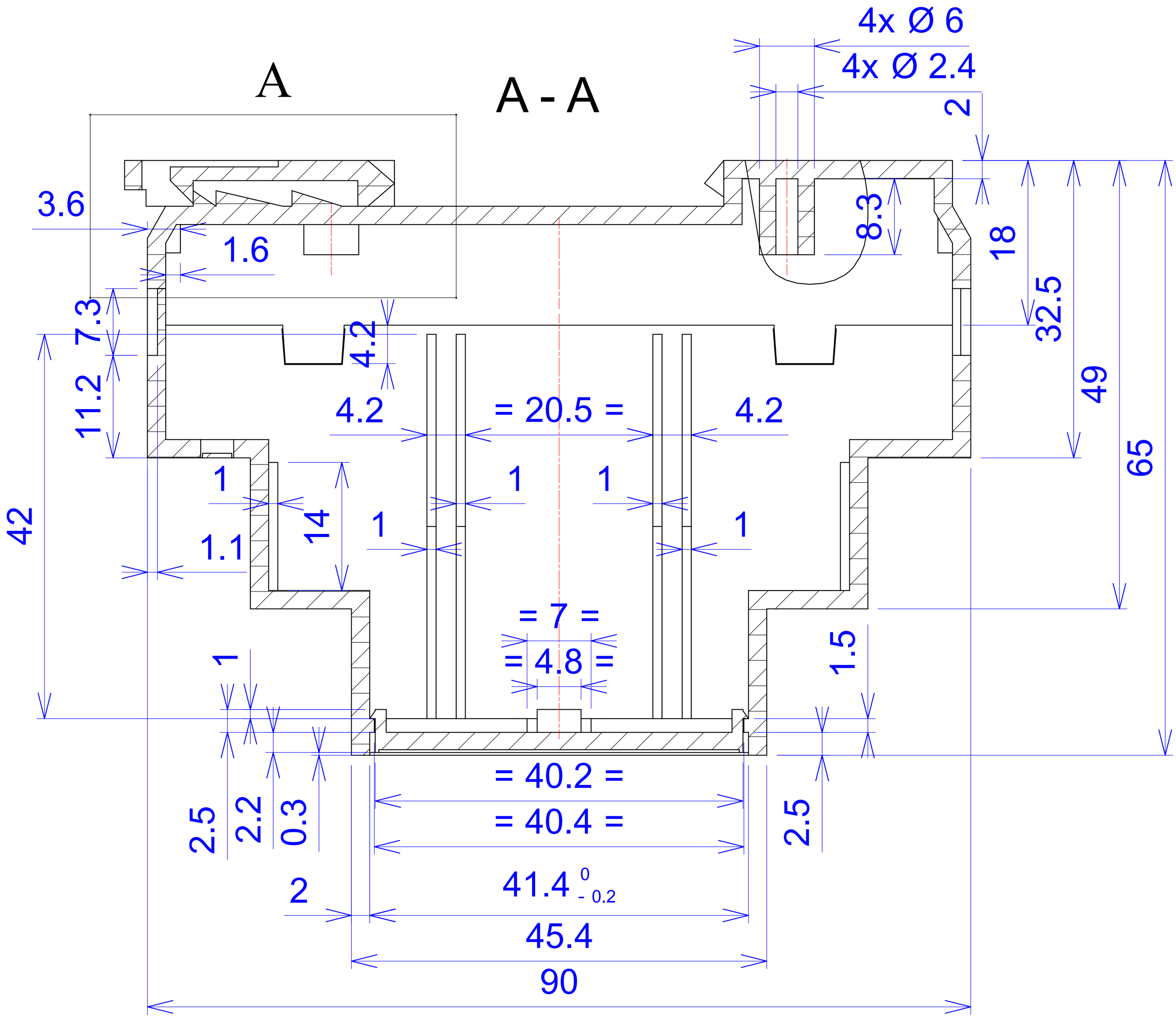
A
A - A
4x Ø 6
4x Ø 2.4
2
3.6
1.6
8.3
18
32.5
49
65
7.3
4.2
11.2
4.2
= 20.5 =
4.2
1
1
1
42
14
1
1
1.1
= 7 =
= 4.8 =
1.5
1
2.5
2.2
0.3
= 40.2 =
= 40.4 =
2.5
2
41.4 0 - 0.2
45.4
90

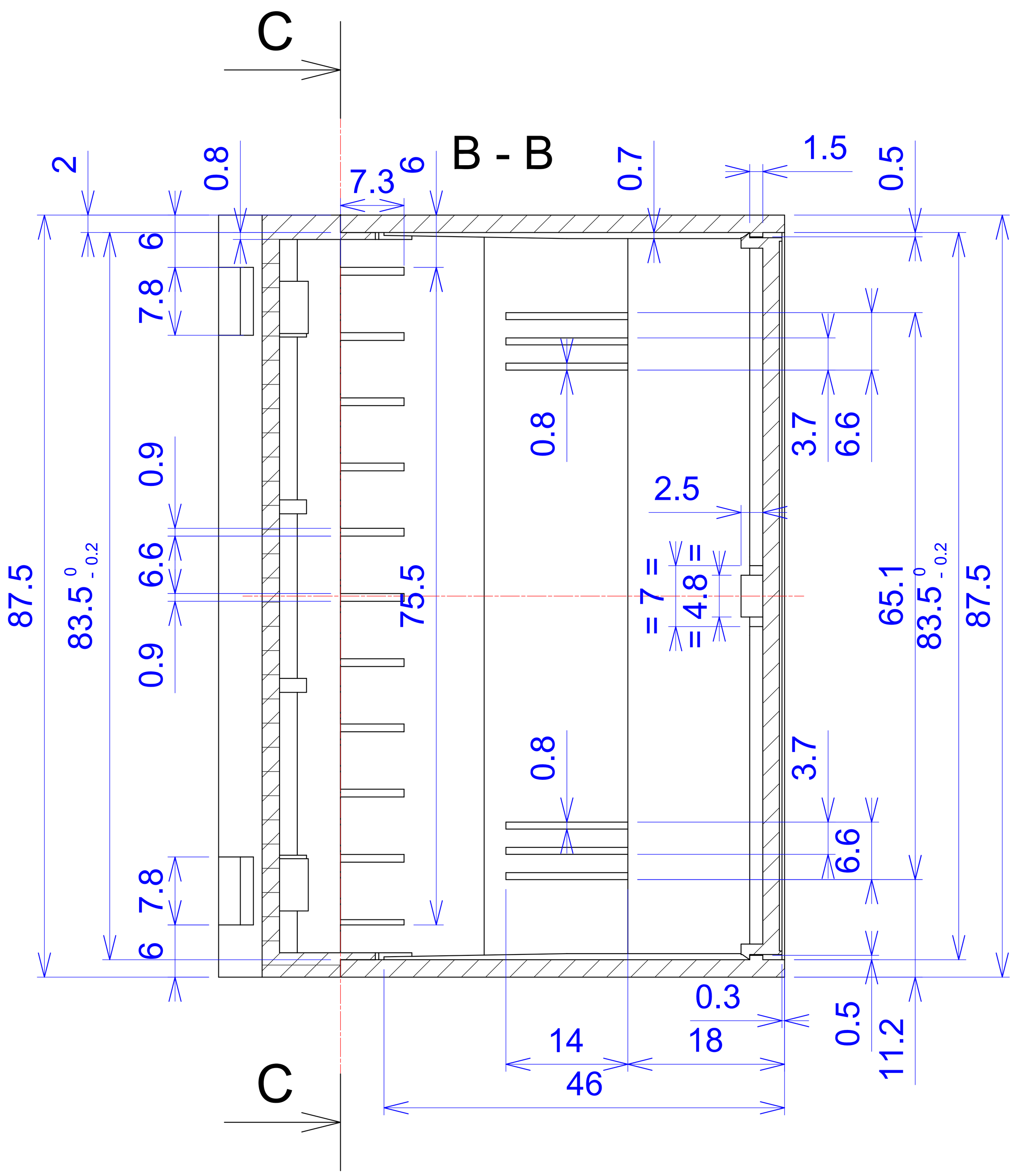
C
B - B
C
2
0.8
7.3
6
0.7
1.5
0.5
6
7.8
0.9
6.6
0.9
7.8
6
87.5
83.5 0 - 0.2
75.5
0.8
0.8
3.7
6.6
2.5
= 7 =
= 4.8 =
65.1
83.5 0 - 0.2
87.5
3.7
6.6
0.3
0.5
11.2
14
18
46

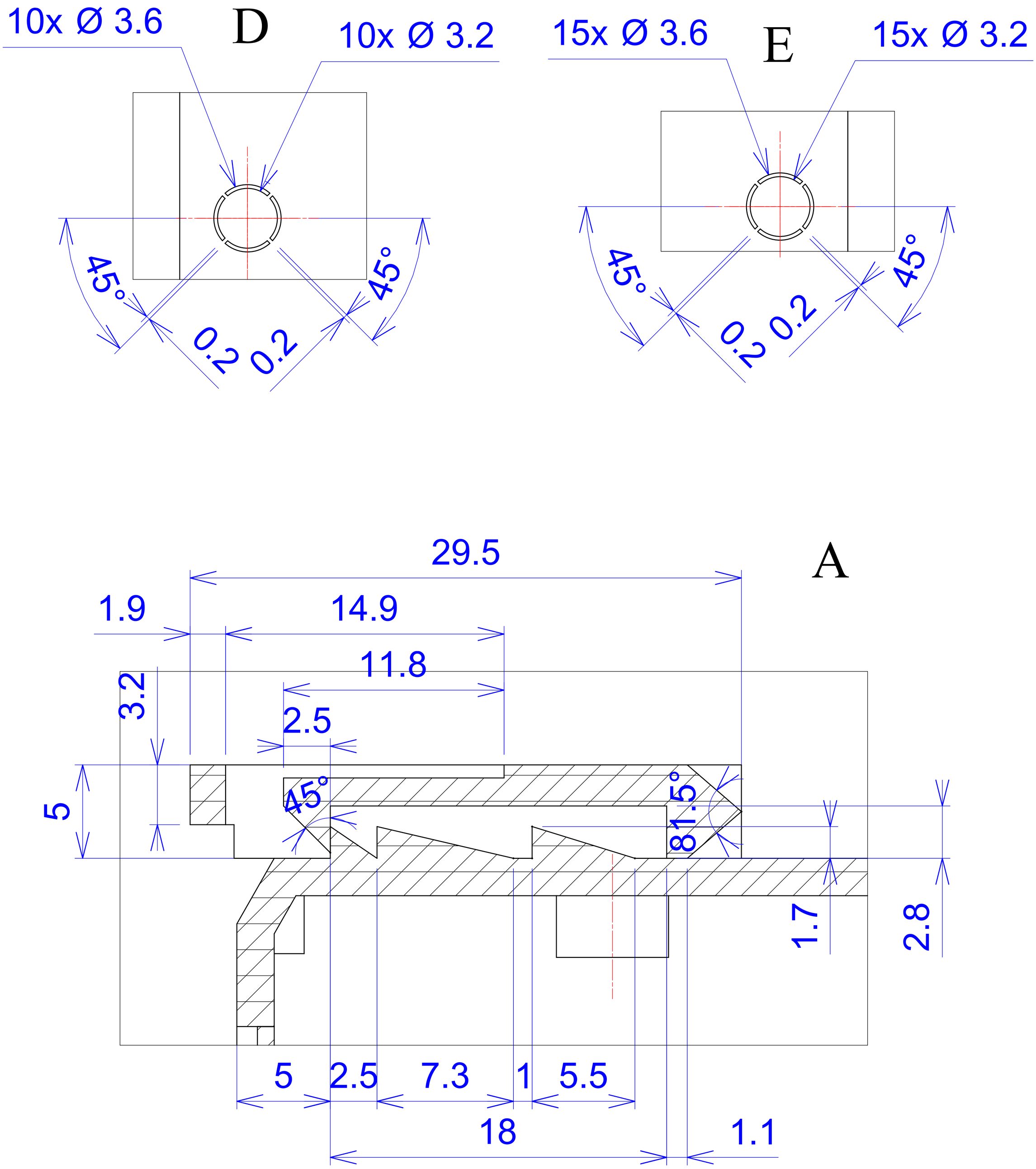
10x Ø 3.6
D
10x Ø 3.2
45°
45°
0.2
0.2
15x Ø 3.6
E
15x Ø 3.2
45°
45°
0.2
0.2
29.5
A
1.9
14.9
11.8
3.2
2.5
5
45°
81.5°
1.7
2.8
5
2.5
7.3
1
5.5
18
1.1

E - E

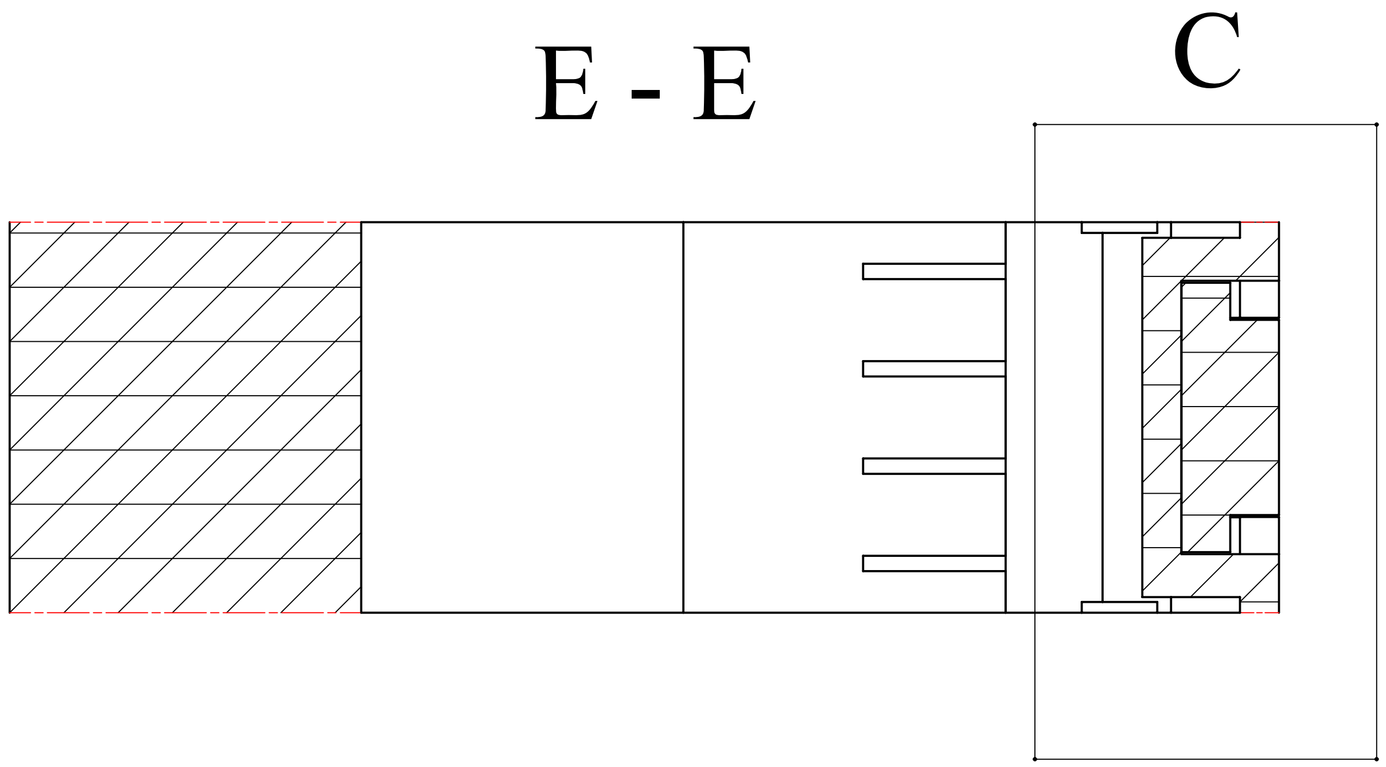

F - F

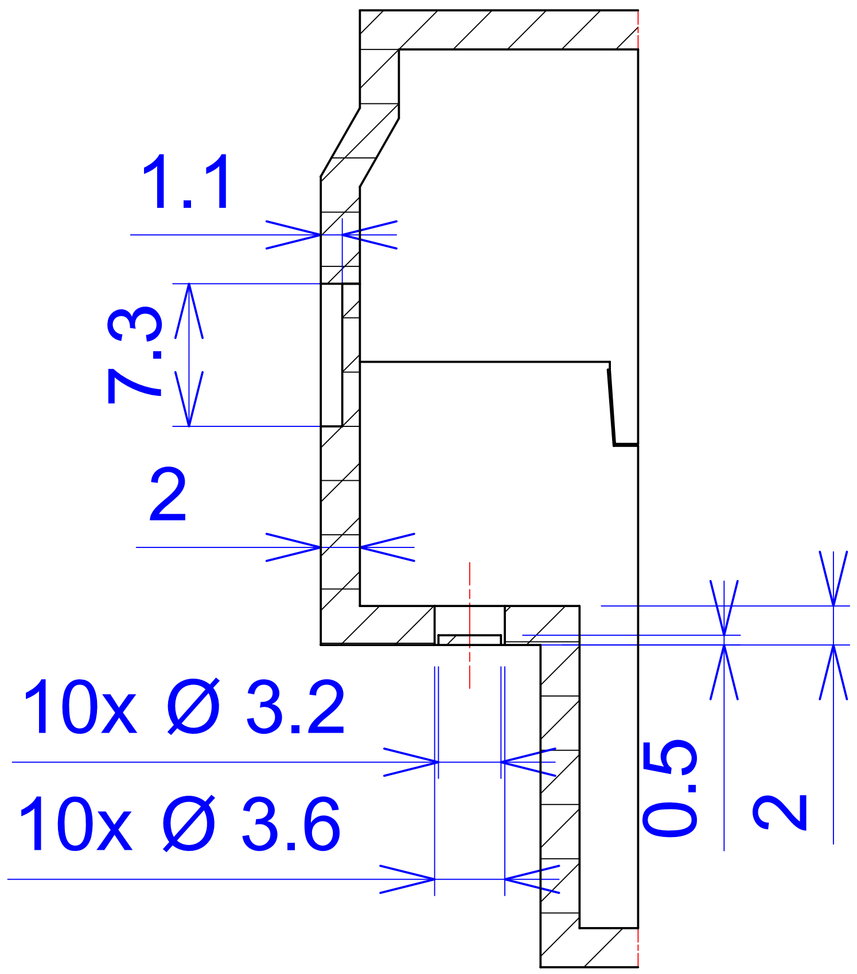

C

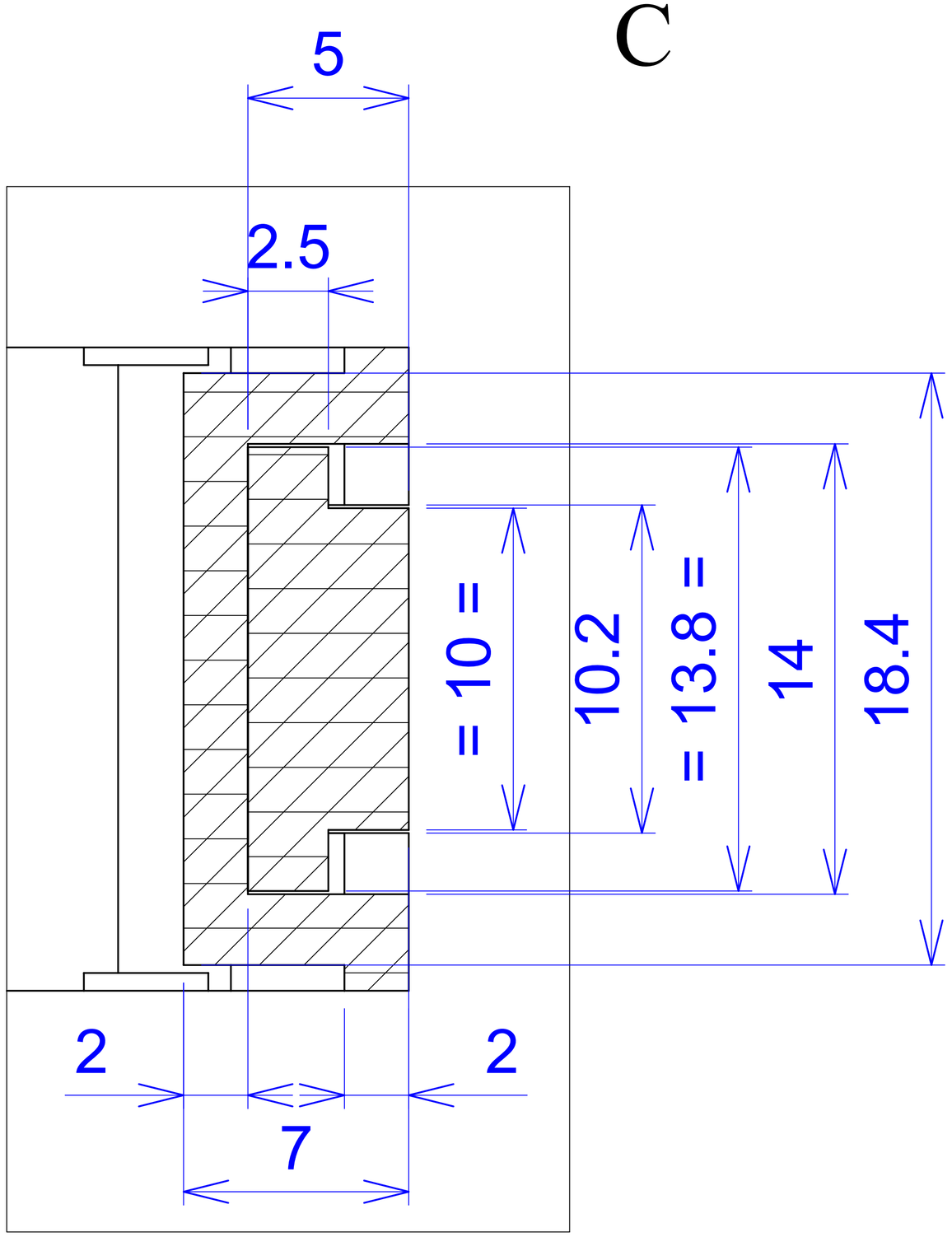

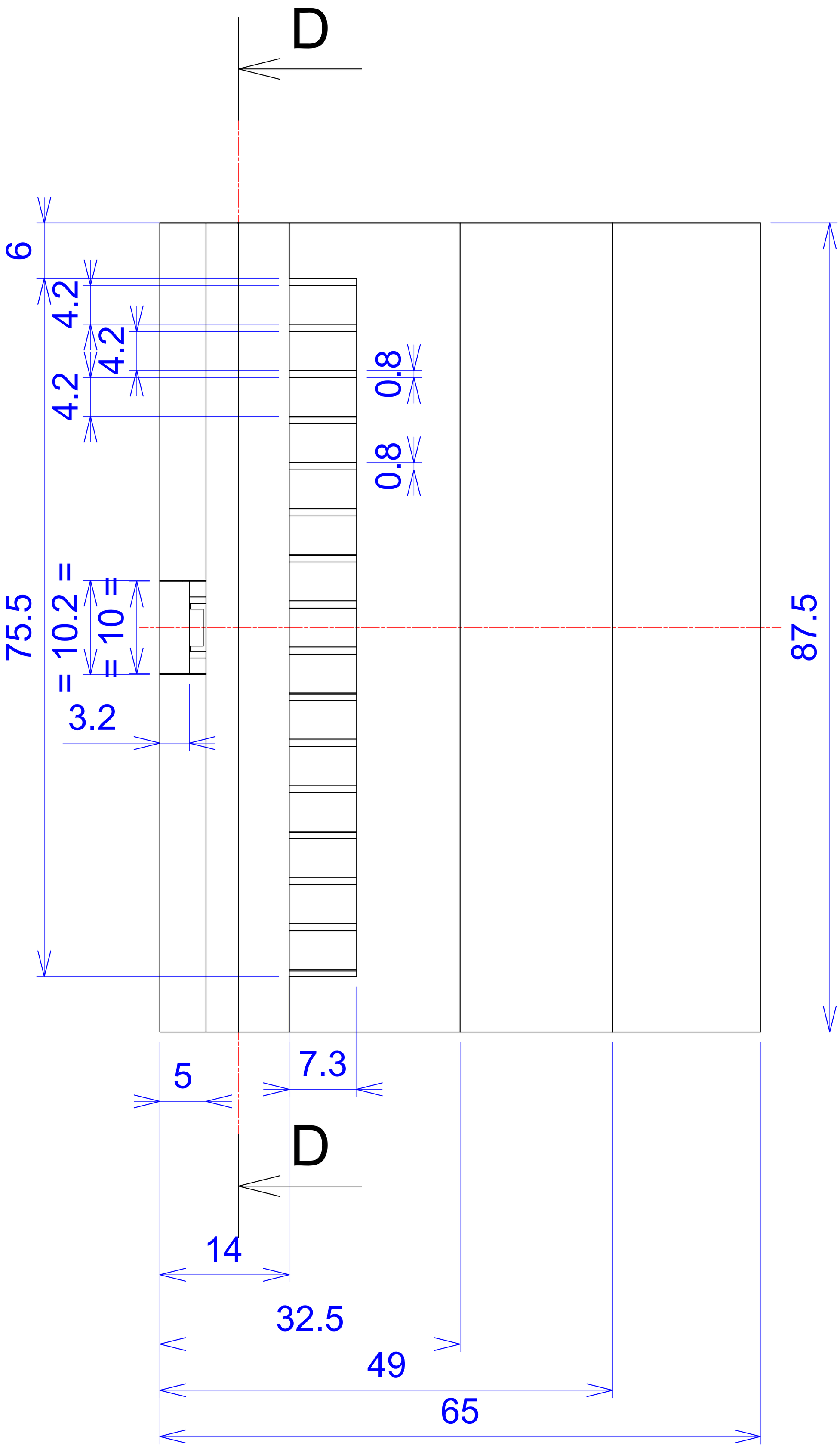
D
6
4.2
4.2
4.2
0.8
0.8
75.5
10.2
10
3.2
87.5
5
7.3
D
14
32.5
49
65

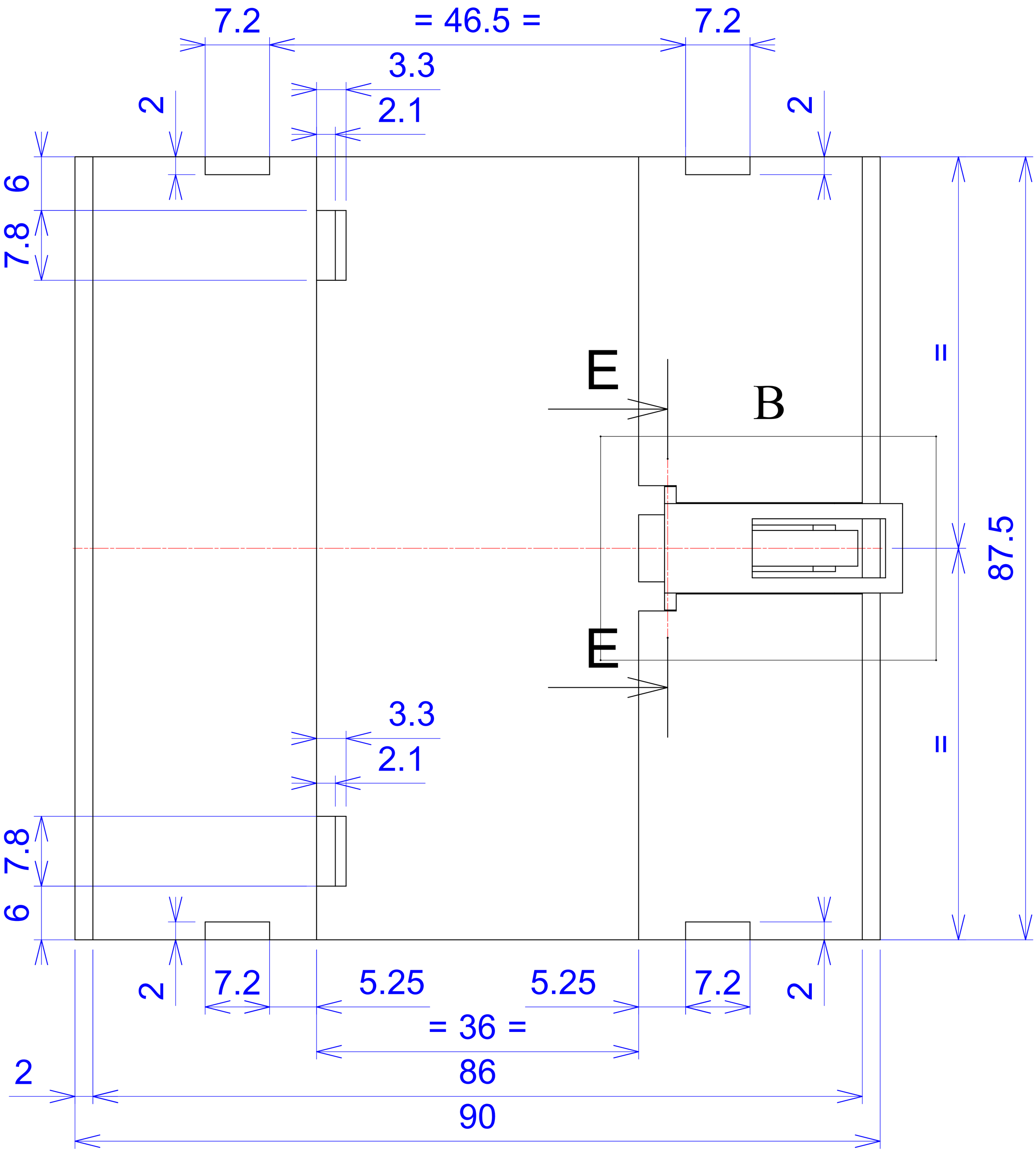
7.2
= 46.5 =
7.2
3.3
2.1
2
2
6
7.8
E
B
E
II
87.5
II
3.3
2.1
7.8
6
2
7.2
5.25
5.25
7.2
2
= 36 =
86
2
90

C - C

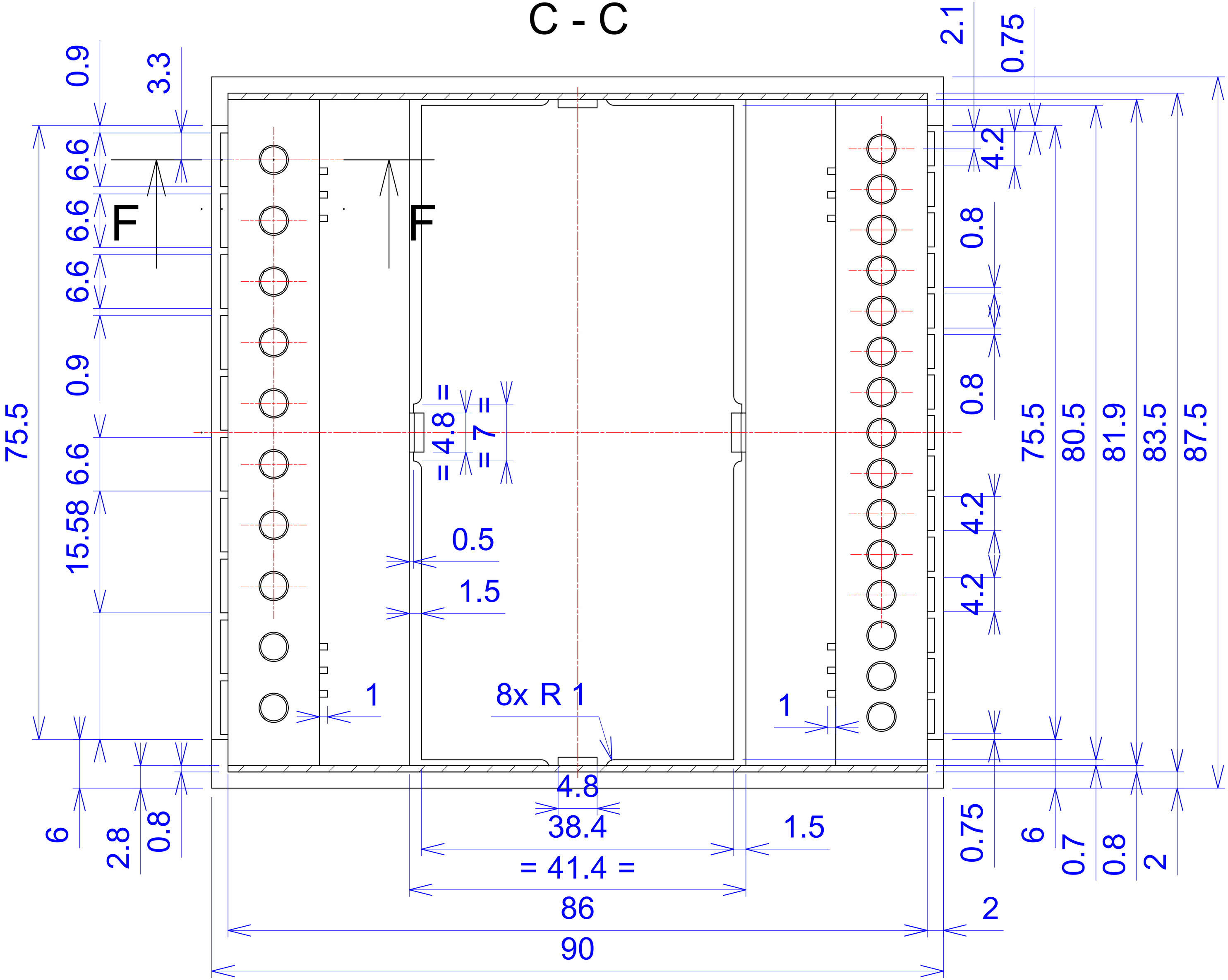
F
F
0.9
3.3
6.6
6.6
6.6
0.9
6.6
15.58
75.5
6
2.8
0.8
2.1
0.75
4.2
0.8
0.8
4.2
4.2
75.5
80.5
81.9
83.5
87.5
0.75
6
0.7
0.8
2
= 4.8 =
= 7 =
0.5
1.5
1
8x R 1
1
4.8
38.4
1.5
= 41.4 =
86
2
90

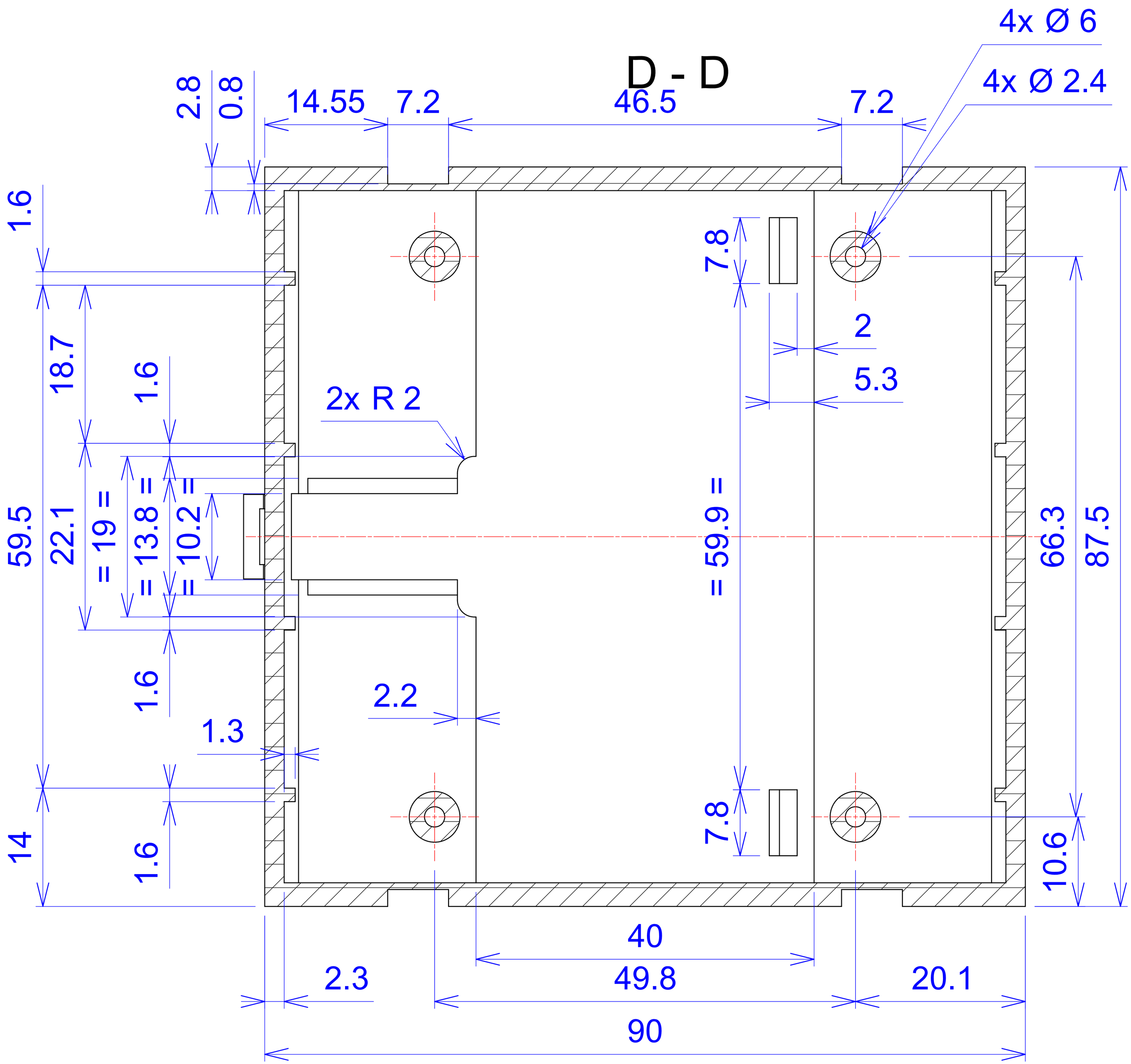
D - D
4x Ø 6
4x Ø 2.4
2.8
0.8
14.55
7.2
46.5
7.2
1.6
7.8
2
5.3
18.7
1.6
2x R 2
59.5
22.1
= 19 =
= 13.8 =
= 10.2 =
= 59.9 =
66.3
87.5
1.6
2.2
1.3
14
1.6
7.8
10.6
40
2.3
49.8
20.1
90
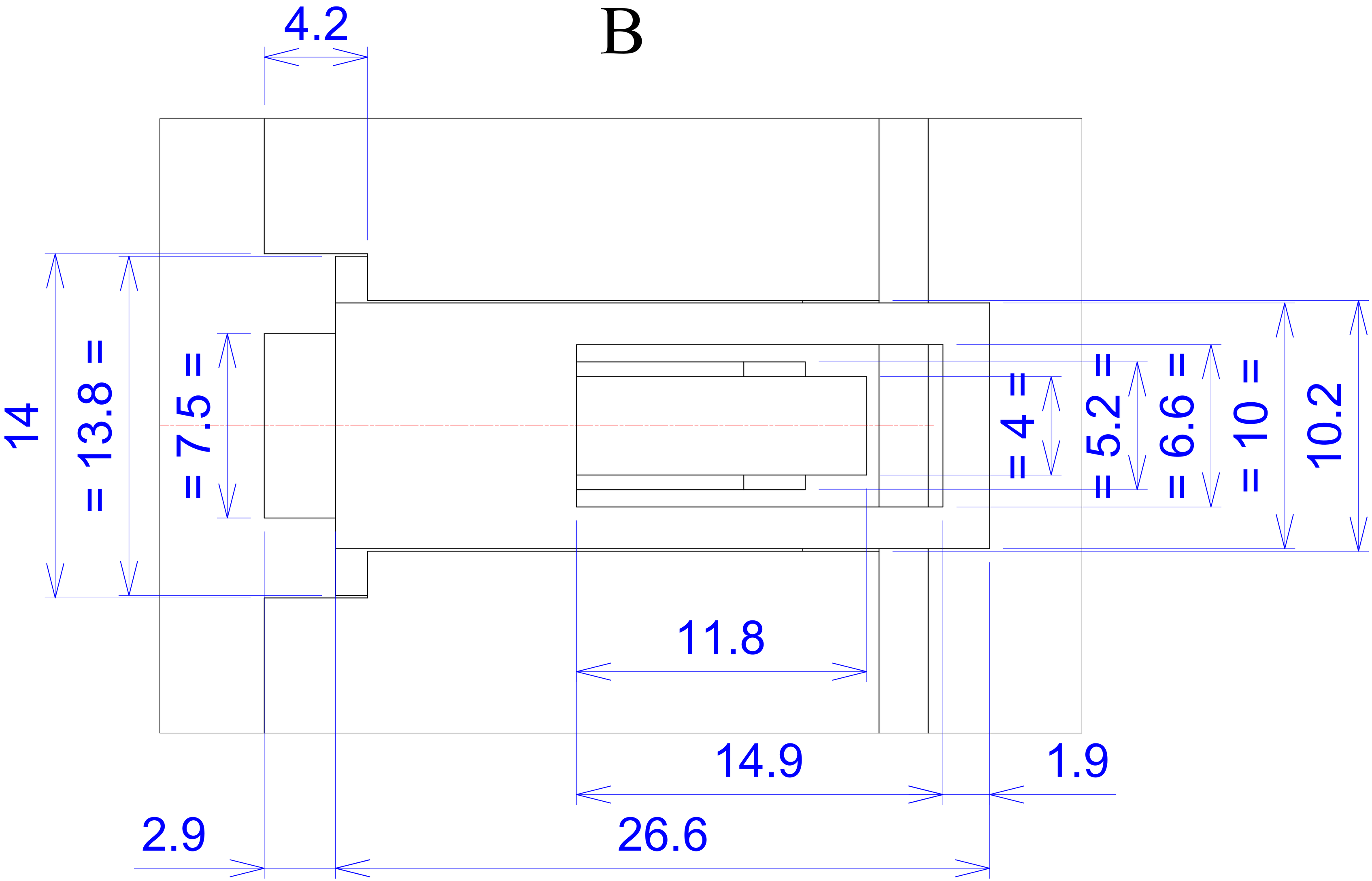
B